GROVE® by Manitowoc

TMS500-2
Product Guide

ASME B30.5
Imperial 85%
Metric 85%

Features

- 36,3 t (40 USt) capacity
- 8,8 m – 29 m (29 ft – 95 ft) four-section full-power boom
- 9,8 m – 31 m (32 ft – 102 ft) four-section full-power boom
- 7,9 m – 13,7 m (26 ft – 45 ft) offsettable telescopic swingaway extension
- Crane Control System (CCS)
- 261 kW (350 bhp) Cummins ISL9 engine

GROVE TMS500-2

The TMS500-2 is designed for superior roadability and fast setup.

Features

Two four-section boom options for flexibility

- 8,8 m – 29,0 m (29 ft – 95 ft) four-section, synchronized, full-power boom
- 9,8 m – 31,0 m (32 ft – 102 ft) four-section, synchronized, full-power boom

Optional extension

- 7,9 m – 13,7m (26 ft – 45 ft) telescoping swingaway lattice extension with manual offsets at 0°, 15° and 30°
- Maximum tip height: 39,1 m (128.2 ft) with 29 m (95 ft) boom
- Maximum tip height: 42,0 m (134.8 ft) with 31 m (102 ft) boom

Outriggers

- Three outrigger position settings (0%, 50% and 100%)
- Inverted outrigger jacks
- Removable aluminum outrigger floats
- Standard auto leveling system
- Equipped with smart length sensing outrigger extension cylinders. This replaces traditional string pots measuring system to improve serviceability and increase accuracy.

Counterweight

- Removable counterweight inserts for a lightweight travel configuration
- Two counterweight packages available: 3629 kg (8000 lb) and 2495 kg (5500 lb)

Crane Control System (CCS)

- Hardware and software that integrates the Crane Control with the Rated Capacity Limiter (RCL) to create one system
- Tilting, full-color, high-resolution Operating and RCL displays for improved visibility
- Designed for maximum operator comfort
- Parts commonality across Grove, Manitowoc and Potain product lines to enhance operator familiarization and serviceability
- Working range limiter
- Programmable function speeds and ramps

CraneSTAR is an exclusive and innovative crane asset management system

that helps improve your profitability and reduce costs by remotely monitoring critical crane data.
Visit www.cranestar.com for more information.

Operator comfort

- Electronic dual-axis crane controls standard
- Improved A/C with higher output and better airflow
- Adjustable seat with hydraulic suspension
- Ergonomically arranged instrumentation
- Cummins ISL9 (2017 on-highway, EPA certified), six-cylinder turbocharged and after-cooled diesel engine, 261 kW (350 bhp) at 2000 rpm
- Eaton Ultrashift Plus automated transmission, 11 speeds forward and three reverse
- Travel speeds up to 105 kph (65 mph)
- ECO Mode for reduced fuel consumption and lower engine noise

Manitowoc Crane Care

Manitowoc Crane Care when you need it.
The assurance of the world's most advanced crane service and support to get you back to work fast.

Manitowoc Finance

Manitowoc Finance helps you get right to work generating profits for your business.
Financial tools that help you capitalize on opportunity with solutions that fit your needs.

Contents

Dimensions 5

Travel proposals 6

Load handling 8

95 ft Main boom 9

29 m Main boom 15

102 ft Main boom 21

31 m Main boom 24

Specifications 27

Symbols glossary 29

Dimensions

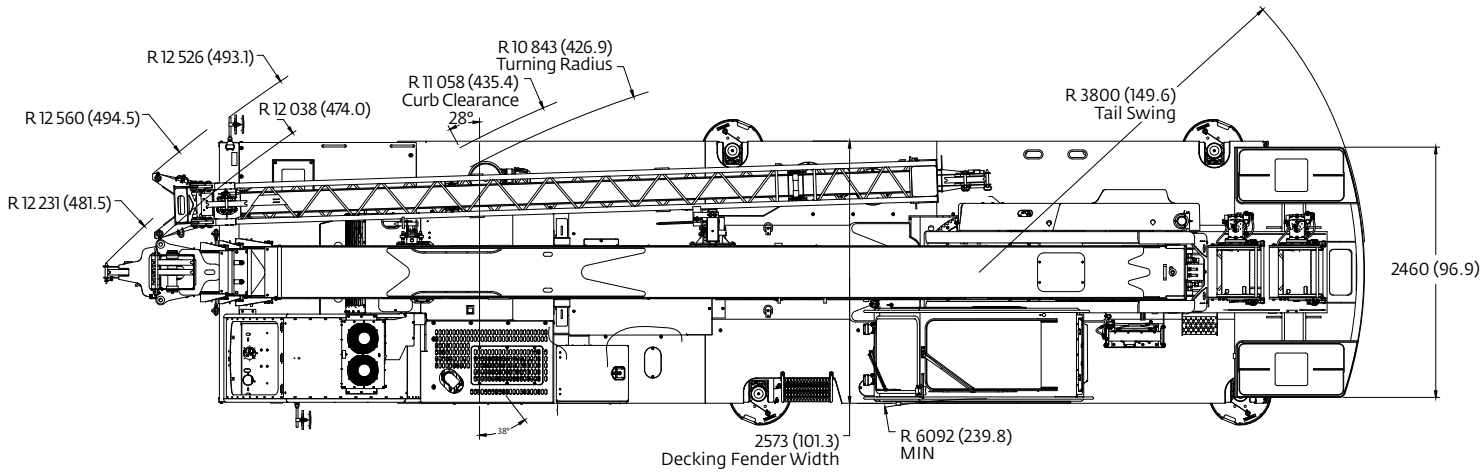

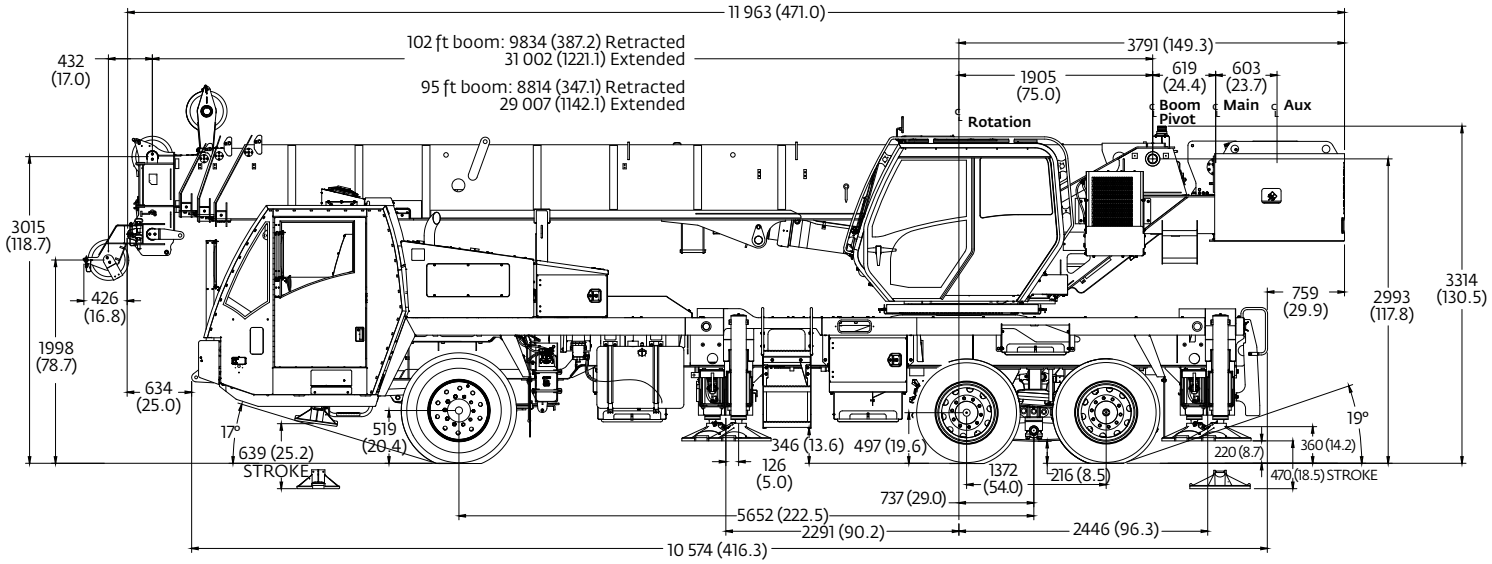

Dimensions shown in mm (in)

Travel proposals

29 m (95 ft) boom over front

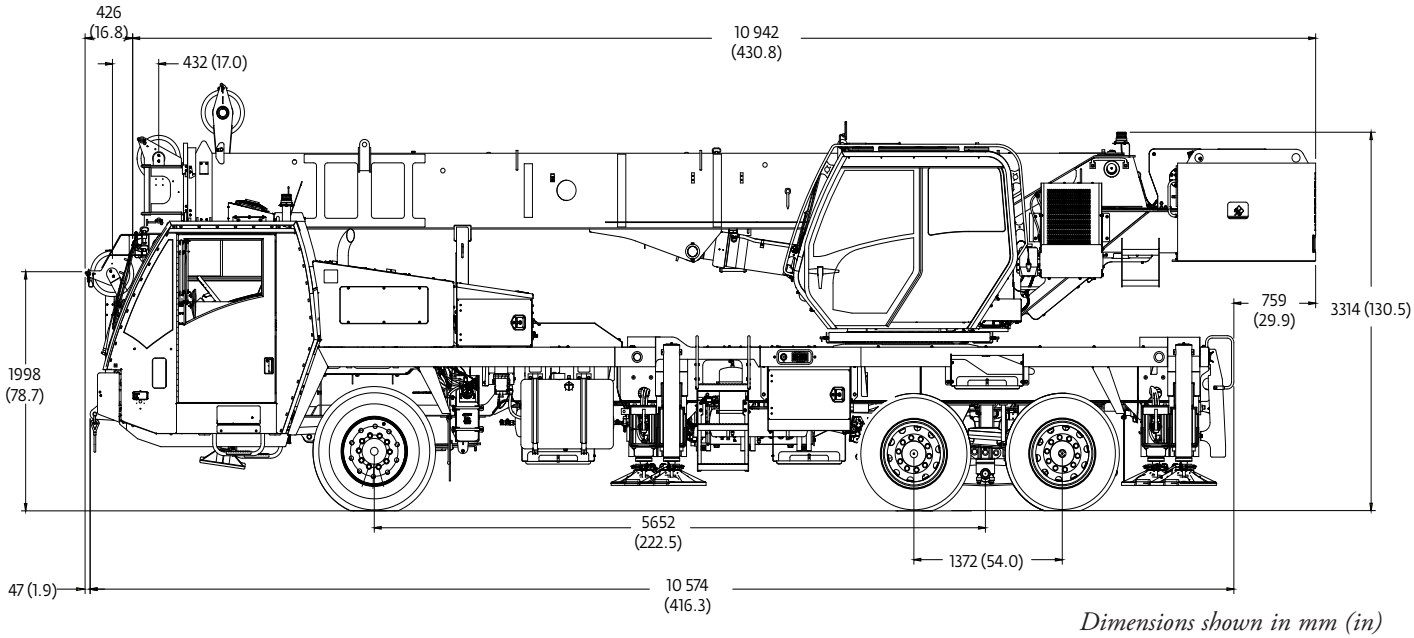

Dimensions shown in mm (in)

Unit configuration

	Front		Rear		G.V.W.	
Basic machine: Includes ISL9 on-highway engine, main hoist with wire rope, air conditioning, no counterweight, full fuel tank and driver	8965 kg	19,765 lb	14 139 kg	31,172 lb	23 103 kg	50,934 lb
Add: 2268 kg (5000 lb) counterweight	8028 kg	17,699 lb	17 348 kg	38,245 lb	25 376 kg	55,944 lb
Add: 3856 kg (8500 lb) counterweight	7384 kg	16,278 lb	19 580 kg	43,166 lb	26 963 kg	59,444 lb
7,9 m – 13,7 m (26 ft – 45 ft) telescoping swingaway lattice extension (includes brackets)	592 kg	1305 lb	269 kg	593 lb	861 kg	1898 lb
Auxiliary hoist	-75 kg	-165 lb	260 kg	574 lb	186 kg	409 lb
Auxiliary boom nose	67 kg	148 lb	-20 kg	-43 lb	48 kg	105 lb
6,8 t (7.5 USt) overhaul ball in stowage tray	229 kg	505 lb	-62 kg	-136 lb	167 kg	369 lb
30 t (33 USt) three-sheave hook block in stowage tray	409 kg	902 lb	-117 kg	-258 lb	292 kg	644 lb

31 m (102 ft) boom over front

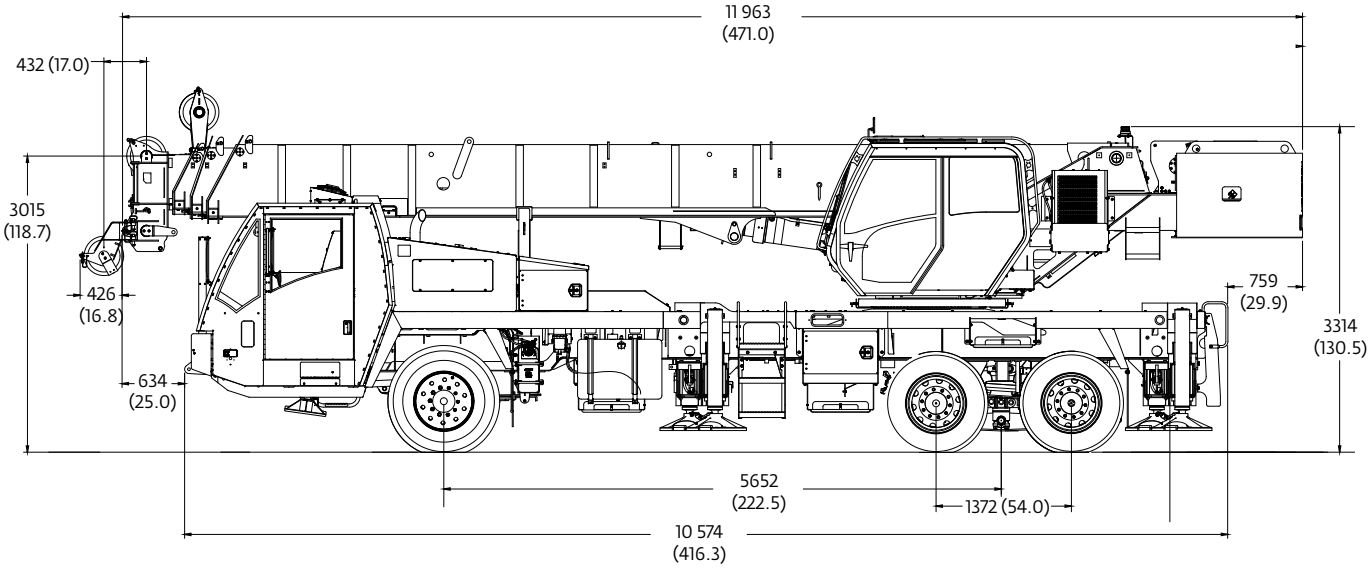

Dimensions shown in mm (in)

Unit configuration

	Front		Rear		G.V.W.	
Basic machine: Includes ISL9 on-highway engine, main hoist with wire rope, air conditioning, 8500-lb counterweight, full fuel tank and driver	8194 kg	18,064 lb	19 650 kg	43,321 lb	27 844 kg	61,385 lb
7,9 m – 13,7 m (26 – 45 ft) telescoping swingaway lattice extension (includes brackets)	747 kg	1646 lb	114 kg	252 lb	861 kg	1898 lb
Auxiliary hoist	-75 kg	-165 lb	260 kg	574 lb	186 kg	409 lb
Auxiliary boom nose	67 kg	148 lb	-20 kg	-43 lb	48 kg	105 lb
6,8 t (7.5 USt) overhaul ball in stowage tray	229 kg	505 lb	-62 kg	-136 lb	167 kg	369 lb
30 t (33 USt) 3-sheave hook block in stowage tray	409 kg	902 lb	-117 kg	-258 lb	292 kg	644 lb

Load handling

Auxiliary boom nose	48 kg (105 lb)

Hook blocks and overhaul weights:	
36 t (40 USt) 4-sheave	351 kg (774 lb) +
30 t (33 USt) 3-sheave	292 kg (644 lb) +
17 t (19 USt) 1-sheave	261 kg (575 lb) +
6,8 t (7.5 USt) overhaul ball	167 kg (369 lb) +
+ Refer to rating plate for actual weight. When lifting over extension and/or jib combinations, deduct total weight of all load handling devices reeved over main boom nose directly from swingaway or jib capacity.	

Hoists	Cable specs	Permissible line pulls	Nominal cable length
Main	16 mm (5/8 in) 35 x 7 Class Rotation Resistant Min. Breaking Strength 27 760 kg (61,200 lb)	5552 kg (12,240 lb)	138 m (453 ft)
Auxiliary	16 mm (5/8 in) 35 x 7 Class Rotation Resistant Min. Breaking Strength 27 760 kg (61,200 lb)	5552 kg (12,240 lb)	138 m (453 ft)
The approximate weight of 16 mm (5/8 in) wire rope is 1.3 kg/m (0.9 lb/ft)			

Hoist performance			
Wire rope layer	Hoist line pull	Drum rope capacity m (ft)	
	Available*	Layer	Total
1	5500 kg (12,200 lb)	22,6 m (74 ft)	22,6 m (74 ft)
2	5035 kg (11,100 lb)	24,7 m (81 ft)	47,2 m (155 ft)
3	4600 kg (10,100 lb)	27,1 m (89 ft)	74,4 m (244 ft)
4	4218 kg (9300 lb)	29,3 m (96 ft)	103,6 m (340 ft)
5	3950 kg (8700 lb)	31,7 m (104 ft)	135,3 m (444 ft)

Working area diagram

Bold lines determine the limiting position of any load for operation within working areas indicated.

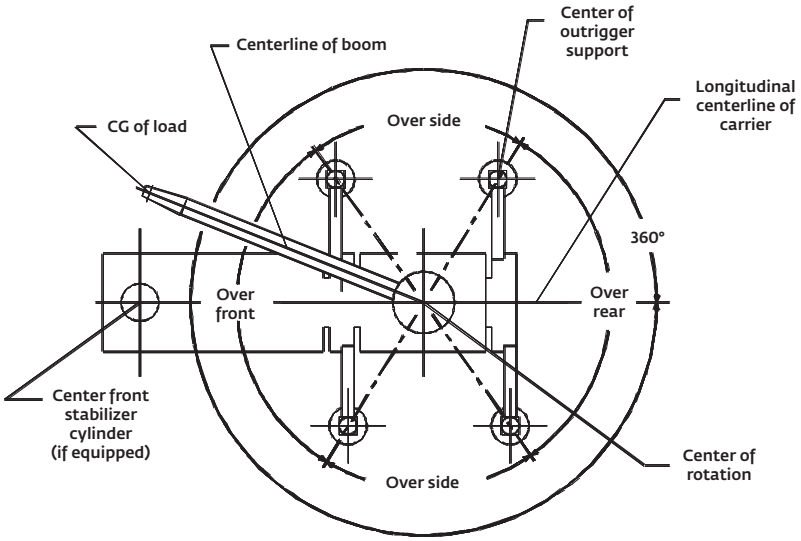

THIS CHART IS ONLY A GUIDE AND SHOULD NOT BE USED TO OPERATE THE CRANE.
The individual crane's load chart, operating instructions and other instructional plates must be read and understood prior to operating the crane.

95 ft main boom

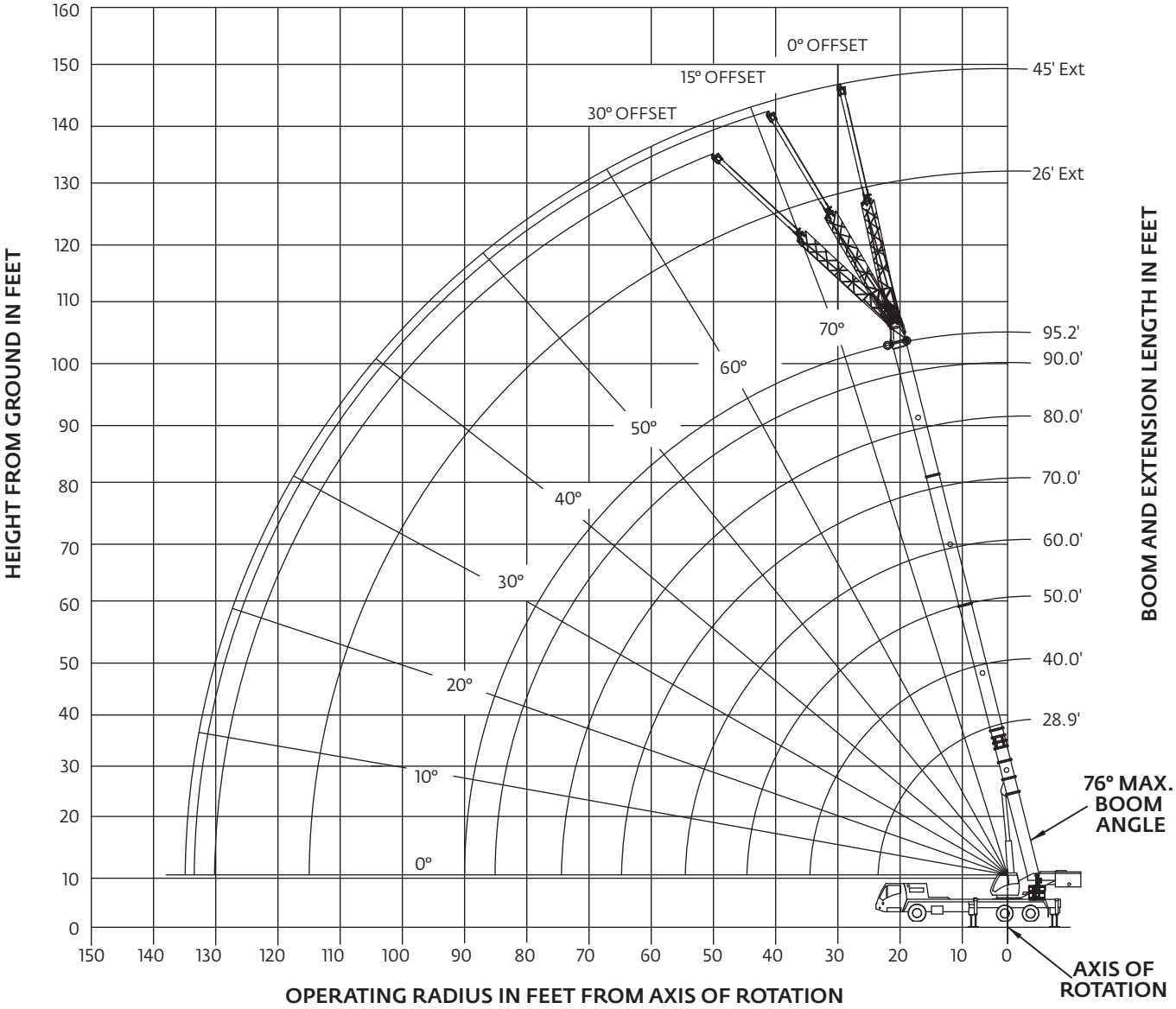

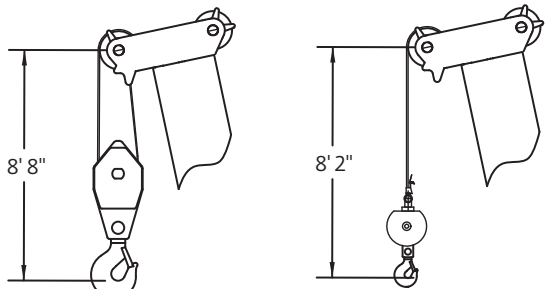

DIMENSIONS ARE FOR THE LARGEST GROVE FURNISHED HOOK BLOCK AND OVERHAUL BALL, WITH ANTI-TWO BLOCK ACTIVATED.

THIS CHART IS ONLY A GUIDE AND SHOULD NOT BE USED TO OPERATE THE CRANE.
The individual crane's load chart, operating instructions and other instructional plates must be read and understood prior to operating the crane.

Load chart

Main boom

29 ft – 95 ft | 8500 lb | 100% | 360°

Pounds

Radius in feet	Main boom length in feet							
	28.9	40.0	50.0	60.0	70.0	80.0	90.0	95.2
8	80,000 (66)							
10	63,000 (61.5)	50,100 (70)	46,950 (74.5)					
12	55,050 (56.5)	50,100 (67)	44,950 (72)	38,850 (75.5)				
15	46,300 (48)	48,750 (62)	41,050 (68.5)	36,000 (72.5)	29,450 (75.5)			
20	36,300 (30.5)	38,400 (53.5)	36,450 (62)	29,500 (67.5)	27,400 (71)	22,450 (74)	18,550* (76)	15,500* (76)
25		29,150 (43)	29,550 (55)	24,800 (62)	23,100 (66.5)	19,250 (70)	16,500 (72.5)	15,300 (73.5)
30		23,050 (29.5)	23,450 (47.5)	21,100 (56.5)	19,600 (62)	16,850 (66)	14,400 (69)	13,200 (70.5)
35			18,600 (38.5)	18,350 (50)	17,000 (57)	14,850 (62)	12,700 (65.5)	11,500 (67)
40			14,650 (26.5)	14,650 (43)	14,950 (52)	13,250 (58)	11,000 (62)	10,000 (64)
45				11,800 (35)	12,150 (46.5)	11,950 (53.5)	9630 (58.5)	9060 (60.5)
50				9710 (24)	10,000 (40)	10,350 (48.5)	8740 (54.5)	7990 (57)
55					8390 (32.5)	8730 (43.5)	7760 (50.5)	7100 (53)
60					7080 (22)	7410 (37.5)	6920 (46)	6320 (49)
65						6340 (30.5)	6210 (41)	5650 (45)
70						5440 (21)	5460 (35.5)	5080 (40)
75							4700 (29)	4570 (35)
80							4050 (20)	4060 (28.5)
85								3490 (20)
Min. boom angle for indicated length (no load)							0°	
Max. boom length at 0° boom angle (no load)							95.2 ft	

NOTE: ( ) Boom angles are in degrees.

Boom angle	Main boom length in feet							
	28.9	40	50	60	70	80	90	95.2
0°	26,450 (22.7)	17,850 (33.8)	12,450 (43.8)	8430 (53.8)	6240 (63.8)	4860 (73.8)	3610 (83.8)	3100 (88.9)

NOTE: ( ) Reference radii in feet.
* This capacity is based on maximum boom angle.

THIS CHART IS ONLY A GUIDE AND SHOULD NOT BE USED TO OPERATE THE CRANE.
The individual crane's load chart, operating instructions and other instructional plates must be read and understood prior to operating the crane.

Load chart
Main boom

29 ft – 95 ft | 5000 lb | 100% | 360°

Pounds

Radius in feet	Main boom length in feet							
	28.9	40.0	50.0	60.0	70.0	80.0	90.0	95.2
8	80,000 (66)							
10	63,000 (61.5)	50,100 (70)	46,950 (74.5)					
12	55,050 (56.5)	50,100 (67)	44,950 (72)	38,850 (75.5)				
15	46,300 (48)	48,750 (62)	41,050 (68.5)	36,000 (72.5)	29,450 (75.5)			
20	35,800 (30.5)	36,650 (53.5)	36,450 (62)	29,500 (67.5)	27,400 (71)	22,450 (74)	18,550* (76)	15,500* (76)
25		27,750 (43)	28,150 (55)	24,800 (62)	23,100 (66.5)	19,250 (70)	16,500 (72.5)	15,300 (73.5)
30		21,500 (29.5)	21,500 (47.5)	21,100 (56.5)	19,600 (62)	16,850 (66)	14,400 (69)	13,200 (70.5)
35			16,200 (38.5)	16,200 (50)	16,500 (57)	14,850 (62)	12,700 (65.5)	11,500 (67)
40			12,650 (26.5)	12,650 (43)	12,950 (52)	13,250 (58)	11,000 (62)	10,000 (64)
45				10,100 (35)	10,450 (46.5)	10,750 (53.5)	9630 (58.5)	9060 (60.5)
50				8220 (24)	8550 (40)	8880 (48.5)	8740 (54.5)	7990 (57)
55					7070 (32.5)	7400 (43.5)	7420 (50.5)	7100 (53)
60					5880 (22)	6220 (37.5)	6240 (46)	6240 (49)
65						5250 (30.5)	5270 (41)	5280 (45)
70						4440 (21)	4460 (35.5)	4470 (40)
75						3780 (29)	3790 (35)	3790 (35)
80						3190 (20)	3200 (28.5)	3200 (28.5)
85							2690 (20)	2690 (20)
Min. boom angle for indicated length (no load)							0°	
Max. boom length at 0° boom angle (no load)							95.2 ft	

NOTE: ( ) Boom angles are in degrees.
* This capacity is based on maximum boom angle.

Boom angle	Main boom length in feet							
	28.9	40	50	60	70	80	90	95.2
0°	26,450 (22.7)	17,300 (33.8)	10,700 (43.8)	7060 (53.8)	5130 (63.8)	3910 (73.8)	2800 (83.8)	2340 (88.9)

NOTE: ( ) Reference radii in feet.

THIS CHART IS ONLY A GUIDE AND SHOULD NOT BE USED TO OPERATE THE CRANE.
The individual crane's load chart, operating instructions and other instructional plates must be read and understood prior to operating the crane.

Load chart

Main boom

29 ft – 95 ft | 0 lb | 100% | 360°

Pounds

Radius in feet	Main boom length in feet							
	28.9	40	50	60	70	80	90	95.2
8	80,000 (66)							
10	63,000 (61.5)	50,100 (70)	46,950 (74.5)					
12	55,050 (56.5)	50,100 (67)	44,950 (72)	38,850 (75.5)				
15	46,300 (48)	47,550 (62)	41,050 (68.5)	36,000 (72.5)	29,450 (75.5)			
20	30,200 (30.5)	33,500 (53.5)	33,900 (62)	29,500 (67.5)	27,400 (71)	22,450 (74)	18,550* (76)	15,500* (76)
25		24,600 (43)	24,650 (55)	24,700 (62)	23,100 (66.5)	19,250 (70)	16,500 (72.5)	15,300 (73.5)
30		17,200 (29.5)	17,250 (47.5)	17,250 (56.5)	17,550 (62)	16,850 (66)	14,400 (69)	13,200 (70.5)
35			12,750 (38.5)	12,750 (50)	13,100 (57)	13,400 (62)	12,700 (65.5)	11,500 (67)
40			9820 (26.5)	9800 (43)	10,100 (52)	10,450 (58)	10,450 (62)	10,000 (64)
45				7670 (35)	8000 (46.5)	8330 (53.5)	8350 (58.5)	8370 (60.5)
50				6070 (24)	6400 (40)	6730 (48.5)	6760 (54.5)	6770 (57)
55					5160 (32.5)	5490 (43.5)	5510 (50.5)	5520 (53)
60					4160 (22)	4500 (37.5)	4520 (46)	4530 (49)
65						3680 (30.5)	3710 (41)	3720 (45)
70						3010 (21)	3030 (35.5)	3040 (40)
75						2450 (29)	2470 (35)	2470 (35)
80						1960 (20)	1970 (28.5)	1970 (28.5)
85							1550 (20)	1550 (20)
Min. boom angle for indicated length (no load)							0°	
Max. boom length at 0° boom angle (no load)							95.2 ft	

NOTE: ( ) Boom angles are in degrees.
* This capacity is based on maximum boom angle.

Boom angle	Main boom length in feet							
	28.9	40	50	60	70	80	90	95.2
0°	20,800 (22.7)	13,700 (33.8)	8150 (43.8)	5100 (53.8)	3530 (63.8)	2560 (73.8)	1630 (83.8)	1240 (88.9)

NOTE: ( ) Reference radii in feet.

THIS CHART IS ONLY A GUIDE AND SHOULD NOT BE USED TO OPERATE THE CRANE.
The individual crane's load chart, operating instructions and other instructional plates must be read and understood prior to operating the crane.

Load chart

Main boom and extension

95 ft | 26 ft – 45 ft | 5000 lb | 100% | 360°

Pounds

Radius in feet	26 ft length			45 ft length		
	0° offset	15° offset	30° offset	0° offset	15° offset	30° offset
30	8750* (76)					
35	8750 (73.5)	7770* (76)		5250* (76)		
40	8500 (71)	7600 (73.5)	6300* (76)	5250 (74.5)		
45	8130 (68.5)	7130 (71)	5920 (74)	5160 (72.5)	3660* (76)	
50	7420 (66)	6420 (68)	5650 (71)	4850 (70.5)	3600 (74)	
55	6520 (63.5)	5630 (65.5)	5400 (68.5)	4440 (68)	3480 (71.5)	3000* (76)
60	5820 (60.5)	4950 (62.5)	4990 (65.5)	4110 (66)	3370 (69)	2950 (74)
65	5100 (57.5)	4380 (60)	4450 (62.5)	3870 (63.5)	3260 (67)	2850 (71.5)
70	4410 (54.5)	3860 (57)	3940 (59.5)	3690 (61)	3160 (64.5)	2750 (69)
75	3710 (51.5)	3410 (54)	3480 (56.5)	3550 (58.5)	3040 (62)	2660 (66.5)
80	3110 (48.5)	3010 (50.5)	3070 (53)	3390 (56)	2920 (59.5)	2570 (64)
85	2590 (45)	2650 (47)	2700 (49)	3080 (53.5)	2800 (57)	2500 (61)
90	2140 (41)	2300 (43)	2360 (45.5)	2760 (51)	2700 (54)	2430 (58)
95	1730 (37)	1880 (39)	1980 (41)	2430 (48)	2590 (51.5)	2380 (55)
100	1380 (32.5)	1510 (34.5)	1590 (36)	2070 (45)	2240 (48.5)	2320 (52)
105	1060 (27.5)	1170 (29)		1750 (42)	1890 (45)	2120 (48.5)
110				1460 (38.5)	1580 (41.5)	1780 (44.5)
115				1200 (34.5)	1290 (37.5)	1470 (40.5)
120					1030 (33)	1190 (35.5)
Min. boom angle for indicated length (no load)	26°	28°	35°	31°	32°	34°
Max. boom at 0° boom angle (no load)	80 ft			70 ft		

NOTE: ( ) Boom angles are in degrees.
* This capacity is based on maximum boom angle.

THIS CHART IS ONLY A GUIDE AND SHOULD NOT BE USED TO OPERATE THE CRANE.
The individual crane's load chart, operating instructions and other instructional plates must be read and understood prior to operating the crane.

Load chart

Main boom and extension

29 ft – 95 ft | 26 ft – 45 ft | 8500 lb | 100% | 360°

Pounds

Radius in feet	26 ft length			45 ft length		
	0° offset	15° offset	30° offset	0° offset	15° offset	30° offset
30	8750* (76)					
35	8750 (73.5)	7770* (76)		5250* (76)		
40	8500 (71)	7600 (73.5)	6300* (76)	5250 (74.5)		
45	8130 (68.5)	7130 (71)	5920 (74)	5160 (72.5)	3660* (76)	
50	7420 (66)	6420 (68)	5650 (71)	4850 (70.5)	3600 (74)	
55	6520 (63.5)	5630 (65.5)	5400 (68.5)	4440 (68)	3480 (71.5)	3000* (76)
60	5820 (60.5)	4950 (62.5)	4990 (65.5)	4110 (66)	3370 (69)	2950 (74)
65	5100 (57.5)	4380 (60)	4450 (62.5)	3870 (63.5)	3260 (67)	2850 (71.5)
70	4500 (54.5)	3860 (57)	3940 (59.5)	3690 (61)	3160 (64.5)	2750 (69)
75	3910 (51.5)	3410 (54)	3480 (56.5)	3550 (58.5)	3040 (62)	2660 (66.5)
80	3480 (48.5)	3010 (50.5)	3070 (53)	3390 (56)	2920 (59.5)	2570 (64)
85	3050 (45)	2650 (47)	2700 (49)	3080 (53.5)	2800 (57)	2500 (61)
90	2650 (41)	2330 (43)	2360 (45.5)	2760 (51)	2700 (54)	2430 (58)
95	2310 (37)	2040 (39)	2070 (41)	2470 (48)	2590 (51.5)	2380 (55)
100	2000 (32.5)	1780 (34.5)	1700 (36)	2200 (45)	2360 (48.5)	2320 (52)
105	1690 (27.5)	1510 (29)		1960 (42)	2140 (45)	2210 (48.5)
110	1370 (20.5)			1740 (38.5)	1930 (41.5)	1990 (44.5)
115				1560 (34.5)	1740 (37.5)	1790 (40.5)
120				1440 (30.5)	1470 (33)	1400 (35.5)
125				1240 (25.5)	1280 (28)	
130				1040 (18.5)		
Min. boom angle for indicated length (no load)	19°	28°	35°	17°	27°	34°
Max. boom at 0° boom angle (no load)	90 ft			80 ft		

NOTE: ( ) Boom angles are in degrees.
* This capacity is based on maximum boom angle.

THIS CHART IS ONLY A GUIDE AND SHOULD NOT BE USED TO OPERATE THE CRANE.
The individual crane's load chart, operating instructions and other instructional plates must be read and understood prior to operating the crane.

29 m main boom

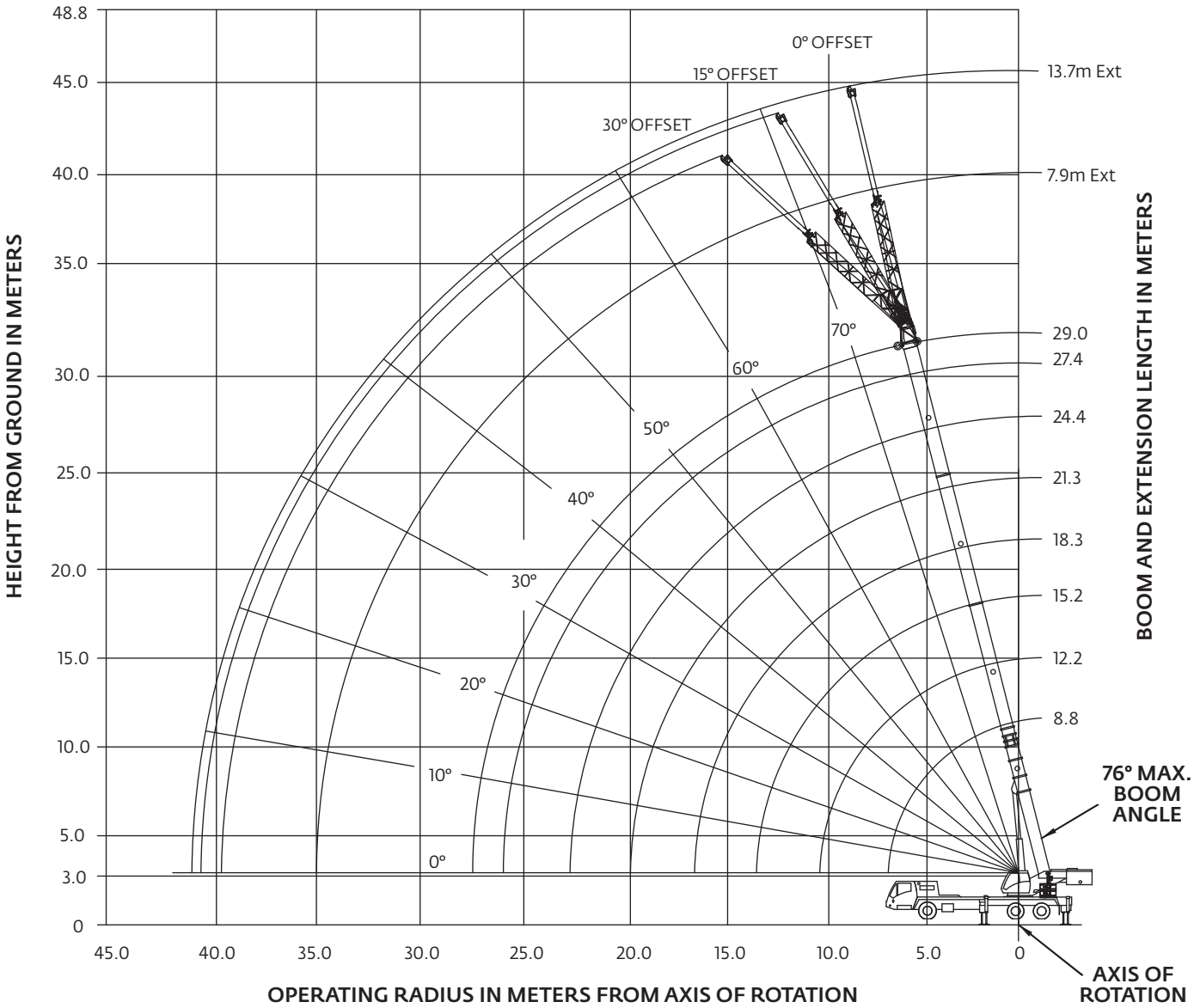

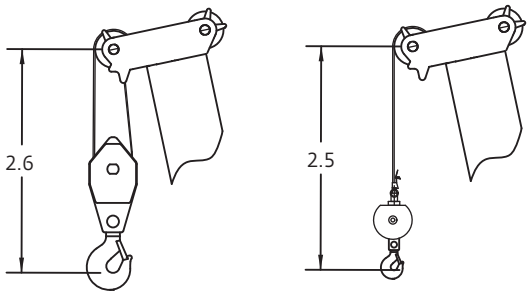

DIMENSIONS ARE FOR THE LARGEST GROVE FURNISHED HOOK BLOCK AND OVERHAUL BALL, WITH ANTI-TWO BLOCK ACTIVATED.

THIS CHART IS ONLY A GUIDE AND SHOULD NOT BE USED TO OPERATE THE CRANE.
The individual crane's load chart, operating instructions and other instructional plates must be read and understood prior to operating the crane.

Load chart
Main boom

8,8 m – 29 m | 3900 kg | 100% | 360°

Meters

Radius in meters	Main boom length in meters							
	8,8	12,2	15,2	18,3	21,3	24,4	27,4	29
2,2	40 000 (67,5)							
3	30 000 (61,5)	22 725 (70,5)	21 300 (75)					
3,5	25 900 (57,5)	22 725 (68)	20 625 (73)	17 625* (76)				
4	23 475 (53,5)	22 725 (65)	19 725 (70,5)	17 125 (74,5)				
4,5	21 300 (49)	22 200 (62,5)	18 750 (68,5)	16 425 (72,5)	13 350 (75,5)			
5	19 725 (44)	20 975 (59,5)	18 025 (66,5)	15 500 (71)	13 100 (74)			
6	16 725 (32)	17 750 (54)	16 650 (62,5)	13 550 (67,5)	12 475 (71,5)	10 175 (74)	8435* (76)	7030* (76)
7		14 700 (47,5)	14 875 (58)	12 100 (64)	11 250 (68,5)	9330 (71,5)	7870 (74)	6975 (75)
8		12 425 (40,5)	12 625 (53,5)	10 825 (60,5)	10 075 (65,5)	8465 (69)	7245 (71,5)	6700 (73)
9		10 675 (31)	10 875 (48)	9745 (57)	9030 (62,5)	7755 (66,5)	6630 (69,5)	6075 (70,5)
10		9300 (17,5)	9475 (42,5)	8890 (53)	8225 (59,5)	7145 (64)	6100 (67)	5555 (68,5)
12			6845 (28)	6840 (44)	6985 (52,5)	6115 (58,5)	5085 (62,5)	4620 (64,5)
14				5165 (33)	5315 (45)	5325 (52,5)	4295 (57,5)	4020 (60)
16				4010 (15,5)	4160 (36,5)	4310 (46)	3745 (52,5)	3420 (55)
18					3315 (24,5)	3465 (38,5)	3210 (47)	2935 (50)
20						2820 (29,5)	2780 (40,5)	2530 (44,5)
22						2310 (15)	2320 (33)	2200 (38)
24							1905 (22,5)	1910 (30)
26								1570 (19,5)
Min. boom angle for indicated length (no load)							0°	
Max. boom length at 0° boom angle (no load)							29 m	

NOTE: ( ) Boom angles are in degrees.
* This capacity is based on maximum boom angle.

Boom angle	Main boom length in meters							
	8,8	12,2	15,2	18,3	21,3	24,4	27,4	29
0°	11 975 (6,9)	8090 (10,3)	5655 (13,3)	3820 (16,4)	2830 (19,4)	2205 (22,5)	1640 (25,5)	1405 (27,1)

NOTE: ( ) Reference radii in meters.

THIS CHART IS ONLY A GUIDE AND SHOULD NOT BE USED TO OPERATE THE CRANE.
The individual crane's load chart, operating instructions and other instructional plates must be read and understood prior to operating the crane.

Load chart
Main boom

8,8 m – 29 m | 2300 kg | 100% | 360°

Meters

Radius in meters	Main boom length in meters							
	8,8	12,2	15,2	18,3	21,3	24,4	27,4	29
2,2	40 000 (67,5)							
3	30 000 (61,5)	22 725 (70,5)	21 300 (75)					
3,5	25 900 (57,5)	22 725 (68)	20 625 (73)	17 625* (76)				
4	23 475 (53,5)	22 725 (65)	19 725 (70,5)	17 125 (74,5)				
4,5	21 300 (49)	22 200 (62,5)	18 750 (68,5)	16 425 (72,5)	13 350 (75,5)			
5	19 725 (44)	20 975 (59,5)	18 025 (66,5)	15 500 (71)	13 100 (74)			
6	16 425 (32)	16 825 (54)	16 650 (62,5)	13 550 (67,5)	12 475 (71,5)	10 175 (74)	8435* (76)	7030* (76)
7		13 900 (47,5)	14 100 (58)	12 100 (64)	11 250 (68,5)	9330 (71,5)	7870 (74)	6975 (75)
8		11 750 (40,5)	11 925 (53,5)	10 825 (60,5)	10 075 (65,5)	8465 (69)	7245 (71,5)	6700 (73)
9		10 050 (31)	10 050 (48)	9745 (57)	9030 (62,5)	7755 (66,5)	6630 (69,5)	6075 (70,5)
10		8285 (17,5)	8285 (42,5)	8290 (53)	8225 (59,5)	7145 (64)	6100 (67)	5555 (68,5)
12			5925 (28)	5920 (44)	6065 (52,5)	6115 (58,5)	5085 (62,5)	4620 (64,5)
14				4410 (33)	4560 (45)	4710 (52,5)	4295 (57,5)	4020 (60)
16				3370 (15,5)	3525 (36,5)	3675 (46)	3680 (52,5)	3420 (55)
18					2760 (24,5)	2915 (38,5)	2920 (47)	2925 (50)
20						2335 (29,5)	2340 (40,5)	2345 (44,5)
22						1875 (15)	1880 (33)	1885 (38)
24							1510 (22,5)	1515 (30)
26								1210 (19,5)
Min. boom angle for indicated length (no load)							0°	
Max. boom length at 0° boom angle (no load)							29 m	

NOTE: ( ) Boom angles are in degrees.
* This capacity is based on maximum boom angle.

Boom angle	Main boom length in meters							
	8,8	12,2	15,2	18,3	21,3	24,4	27,4	29
0°	11 975 (6,9)	7860 (10,3)	4850 (13,3)	3205 (16,4)	2325 (19,4)	1775 (22,5)	1270 (25,5)	1060 (27,1)

NOTE: ( ) Reference radii in meters.

THIS CHART IS ONLY A GUIDE AND SHOULD NOT BE USED TO OPERATE THE CRANE.
The individual crane's load chart, operating instructions and other instructional plates must be read and understood prior to operating the crane.

Load chart
Main boom

8,8 m – 29 m | 0 kg | 100% | 360°

Meters

Radius in meters	Main boom length in meters							
	8,8	12,2	15,2	18,3	21,3	24,4	27,4	29
2,2	36 275 (67,5)							
3	30 000 (61,5)	22 725 (70,5)	21 300 (75)					
3,5	25 900 (57,5)	22 725 (68)	20 625 (73)	17 625* (76)				
4	23 475 (53,5)	22 725 (65)	19 725 (70,5)	17 125 (74,5)				
4,5	21 300 (49)	21 975 (62,5)	18 750 (68,5)	16 425 (72,5)	13 350 (75,5)			
5	18 950 (44)	19 375 (59,5)	18 025 (66,5)	15 500 (71)	13 100 (74)			
6	14 350 (32)	15 500 (54)	15 675 (62,5)	13 550 (67,5)	12 475 (71,5)	10 175 (74)	8435* (76)	7030* (76)
7		12 775 (47,5)	12 950 (58)	12 100 (64)	11 250 (68,5)	9330 (71,5)	7870 (74)	6975 (75)
8		10 125 (40,5)	10 150 (53,5)	10 175 (60,5)	10 075 (65,5)	8465 (69)	7245 (71,5)	6700 (73)
9		8060 (31)	8070 (48)	8075 (57)	8225 (62,5)	7755 (66,5)	6630 (69,5)	6075 (70,5)
10		6575 (17,5)	6580 (42,5)	6580 (53)	6730 (59,5)	6875 (64)	6100 (67)	5555 (68,5)
12			4600 (28)	4590 (44)	4740 (52,5)	4890 (58,5)	4900 (62,5)	4620 (64,5)
14				3330 (33)	3480 (45)	3630 (52,5)	3640 (57,5)	3645 (60)
16				2455 (15,5)	2605 (36,5)	2755 (46)	2765 (52,5)	2770 (55)
18					1965 (24,5)	2120 (38,5)	2130 (47)	2135 (50)
20						1630 (29,5)	1640 (40,5)	1645 (44,5)
22						1245 (15)	1255 (33)	1260 (38)
24							945 (22,5)	950 (30)
26								690 (19,5)
Min. boom angle for indicated length (no load)							0°	
Max. boom length at 0° boom angle (no load)							29 m	

NOTE: ( ) Boom angles are in degrees.
* This capacity is based on maximum boom angle.

Boom angle	Main boom length in meters							
	8,8	12,2	15,2	18,3	21,3	24,4	27,4	29
0°	9455 (6,9)	6215 (10,3)	3695 (13,3)	2315 (16,4)	1600 (19,4)	1160 (22,5)	740 (25,5)	565 (27,1)

NOTE: ( ) Reference radii in meters.

THIS CHART IS ONLY A GUIDE AND SHOULD NOT BE USED TO OPERATE THE CRANE.
The individual crane's load chart, operating instructions and other instructional plates must be read and understood prior to operating the crane.

Load chart

Main boom and extension

29 m | 7,9 m – 13,7 m | 2300 kg | 100% | 360°

Meters

Radius in meters	7,9 m length			13,7 m length		
	0° offset	15° offset	30° offset	0° offset	15° offset	30° offset
10	3965 (75)					
12	3870 (71,5)	3460 (74)		2380 (75)		
14	3630 (68)	3170 (70,5)	2665 (73,5)	2315 (72)	1655 (75,5)	
16	3165 (64,5)	2730 (67)	2505 (70)	2105 (69)	1605 (72,5)	
18	2700 (61)	2300 (63,5)	2300 (66)	1890 (66)	1540 (69,5)	1345 (74,5)
20	2280 (57,5)	1955 (59,5)	1990 (62,5)	1745 (63)	1470 (66,5)	1285 (71)
22	1855 (53,5)	1665 (55,5)	1695 (58)	1645 (60)	1410 (63,5)	1230 (68)
24	1475 (49)	1410 (51,5)	1440 (53,5)	1555 (56,5)	1335 (60)	1175 (64,5)
26	1160 (44,5)	1195 (47)	1215 (49)	1390 (53,5)	1265 (56,5)	1130 (61)
28	900 (39,5)	970 (42)	1020 (44)	1200 (50)	1205 (53)	1095 (57)
30	675 (34)	735 (36)	775 (38)	990 (46)	1070 (49,5)	1060 (53)
32		535 (29)		795 (42)	860 (45)	960 (48,5)
34				625 (37,5)	675 (40,5)	760 (43,5)
36					510 (35)	590 (37,5)
Min. boom angle for indicated length (no load)	26°	28°	35°	31°	32°	34°
Max. boom at 0° boom angle (no load)	24,4 m			21,3 m		

NOTE: ( ) Boom angles are in degrees.

THIS CHART IS ONLY A GUIDE AND SHOULD NOT BE USED TO OPERATE THE CRANE.
The individual crane's load chart, operating instructions and other instructional plates must be read and understood prior to operating the crane.

Load chart

Main boom and extension

29 m | 7,9 m – 13,7 m | 3900 kg | 100% | 360°

Meters

Radius in meters	7,9 m length			13,7 m length		
	0° offset	15° offset	30° offset	0° offset	15° offset	30° offset
10	3965 (75)					
12	3870 (71,5)	3460 (74)		2380 (75)		
14	3630 (68)	3170 (70,5)	2665 (73,5)	2315 (72)	1655 (75,5)	
16	3165 (64,5)	2730 (67)	2505 (70)	2105 (69)	1605 (72,5)	
18	2700 (61)	2300 (63,5)	2300 (66)	1890 (66)	1540 (69,5)	1345 (74,5)
20	2280 (57,5)	1955 (59,5)	1990 (62,5)	1745 (63)	1470 (66,5)	1285 (71)
22	1925 (53,5)	1665 (55,5)	1695 (58)	1645 (60)	1410 (63,5)	1230 (68)
24	1625 (49)	1410 (51,5)	1440 (53,5)	1555 (56,5)	1335 (60)	1175 (64,5)
26	1375 (44,5)	1195 (47)	1215 (49)	1390 (53,5)	1265 (56,5)	1130 (61)
28	1145 (39,5)	1010 (42)	1025 (44)	1200 (50)	1205 (53)	1095 (57)
30	955 (34)	845 (36)	825 (38)	1035 (46)	1105 (49,5)	1060 (53)
32	765 (27,5)	685 (29)		890 (42)	970 (45)	1000 (48,5)
34				765 (37,5)	850 (40,5)	875 (43,5)
36				675 (32)	710 (35)	700 (37,5)
38				570 (25,5)	585 (28,5)	
Min. boom angle for indicated length (no load)	19°	28°	35°	17°	27°	34°
Max. boom at 0° boom angle (no load)	27,4 m			24,4 m		

NOTE: ( ) Boom angles are in degrees.

THIS CHART IS ONLY A GUIDE AND SHOULD NOT BE USED TO OPERATE THE CRANE.
The individual crane's load chart, operating instructions and other instructional plates must be read and understood prior to operating the crane.

102 ft main boom

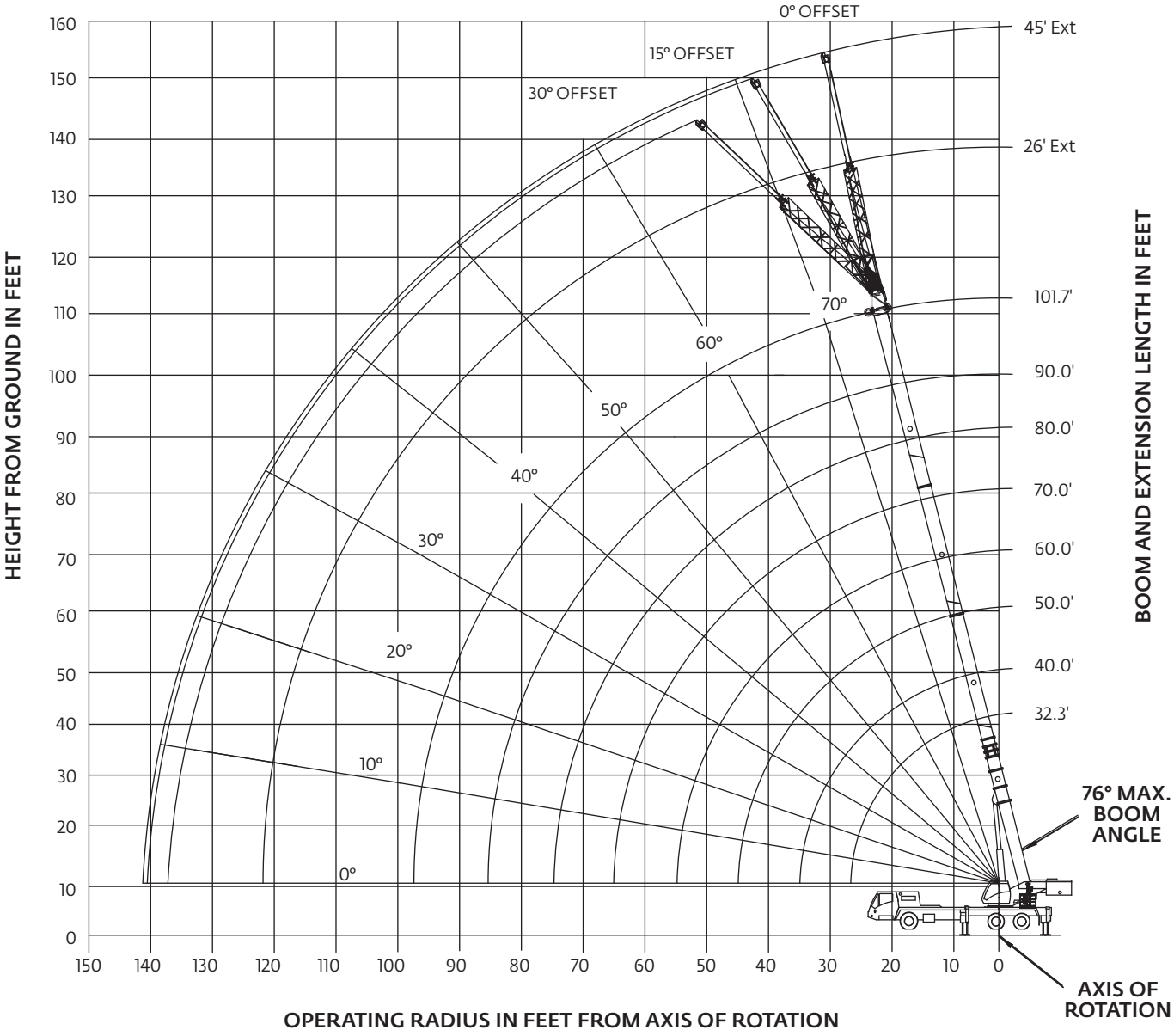

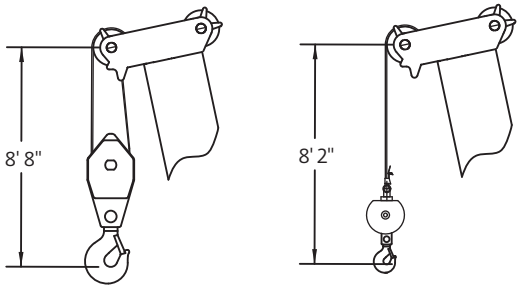

DIMENSIONS ARE FOR THE LARGEST GROVE FURNISHED HOOK BLOCK AND OVERHAUL BALL, WITH ANTI-TWO BLOCK ACTIVATED.

THIS CHART IS ONLY A GUIDE AND SHOULD NOT BE USED TO OPERATE THE CRANE.
The individual crane's load chart, operating instructions and other instructional plates must be read and understood prior to operating the crane.

Load chart

Main boom

32 ft – 102 ft | 8500 lb | 100% | 360°

Pounds

Radius in feet	Main boom length in feet							
	32.3	40	50	60	70	80	90	101.7
8	80,000 (69)							
10	72,750 (65)	50,700 (70.5)	48,500 (75)					
12	63,500 (61)	50,700 (67.5)	48,500 (72.5)	46,400* (76)				
15	52,350 (54.5)	50,700 (62.5)	48,500 (69)	44,300 (73)	38,700* (76)			
20	37,150 (41.5)	37,700 (53.5)	38,150 (62.5)	35,300 (68)	31,000 (71.5)	29,700 (74.6)	22,000* (76)	
25	27,800 (20.5)	28,350 (43.5)	28,800 (55.5)	29,050 (62.5)	25,800 (67)	24,600 (70.5)	22,000 (73)	18,500* (76)
30		22,200 (30)	22,650 (43.5)	22,900 (56.5)	21,800 (62.5)	20,800 (66.5)	18,350 (69.5)	17,500 (72.5)
35			18,350 (38.5)	18,550 (50.5)	18,700 (57.5)	17,800 (62.5)	15,600 (66)	15,200 (69.5)
40			14,600 (26.5)	14,700 (43.5)	14,850 (52.5)	15,000 (58.5)	13,500 (62.5)	13,200 (66.5)
45				11,850 (35)	12,000 (46.5)	12,150 (54)	11,750 (59)	11,600 (63.5)
50				9610 (24.5)	9880 (40.5)	10,000 (49.5)	10,000 (55)	10,000 (60.5)
55					8170 (33)	8320 (44.5)	8330 (51)	8330 (57)
60					6790 (22.5)	6970 (38.5)	6980 (46.5)	6990 (53.5)
65						5840 (31.5)	5890 (42)	5890 (49.5)
70						4890 (22.5)	4950 (36.5)	4980 (45.5)
75							4150 (29.5)	4200 (41)
80							3470 (21)	3520 (36)
85								2930 (30.5)
90								2410 (23)
95								1950 (9.5)
Min. boom angle for indicated length (no load)							0°	
Max. boom length at 0° boom angle (no load)							101.7 ft	

NOTE: ( ) Boom angles are in degrees.
* This capacity is based on maximum boom angle.

Boom angle	Main boom length in feet							
	32.3	40	50	60	70	80	90	101.7
0°	26,300 (26)	18,800 (33.8)	12,300 (43.8)	8340 (53.8)	5930 (63.8)	4280 (73.8)	3020 (83.8)	1910 (95.5)

NOTE: ( ) Reference radii in feet.

THIS CHART IS ONLY A GUIDE AND SHOULD NOT BE USED TO OPERATE THE CRANE.
The individual crane's load chart, operating instructions and other instructional plates must be read and understood prior to operating the crane.

Load chart

Main boom and extension

102 ft | 26 ft - 45 ft | 8500 lb | 100% | 360°

Pounds

Radius in feet	26 ft. length			45 ft. length		
	0° offset	15° offset	30° offset	0° offset	15° offset	30° offset
35	10,200 (75.5)					
40	9460 (73)	7700 (75)		5250* (76)		
45	8760 (71)	7370 (72.5)	6030 (75)	5250 (74.5)		
50	8150 (68.5)	6870 (70)	5780 (72.5)	5050 (72.5)	3660 (75.5)	
55	7510 (66)	6050 (67.5)	5520 (70)	4650 (70.5)	3540 (73.5)	
60	6700 (63)	5350 (65)	5290 (67.5)	4290 (68.5)	3430 (71)	3000 (75.5)
65	5910 (60.5)	4740 (62.5)	4810 (65)	4000 (66)	3320 (69)	2890 (73.5)
70	4990 (58)	4210 (59.5)	4270 (62)	3800 (64)	3220 (67)	2790 (71)
75	4200 (55)	3750 (56.5)	3800 (59)	3650 (61.5)	3130 (64.5)	2700 (68.5)
80	3530 (52)	3330 (53.5)	3380 (56)	3520 (59)	3000 (62)	2620 (66)
85	2950 (48.5)	2960 (50.5)	3010 (53)	3360 (57)	2880 (59.5)	2550 (63.5)
90	2440 (45)	2630 (47.5)	2670 (49.5)	3030 (54.5)	2770 (57)	2480 (61)
95	1990 (41.5)	2160 (43.5)	2300 (46)	2670 (51.5)	2680 (54.5)	2410 (58)
100	1600 (38)	1720 (39.5)	1840 (42)	2270 (48.5)	2570 (51.5)	2380 (55.5)
105	1240 (33.5)	1320 (35.5)	1430 (37.5)	1900 (45.5)	2200 (48.5)	2310 (52)
110				1580 (42.5)	1820 (45.5)	2040 (48.5)
115				1280 (39)	1490 (42)	1660 (45)
120				1010 (35.5)	1180 (38.5)	1330 (41)
125						1020 (36.5)
Min. boom angle for indicated length (no load)	29°	31°	36°	34°	35°	35°
Max. boom length at 0° boom angle (no load)	80 ft.			80 ft.		

NOTE: ( ) Boom angles are in degrees.

* This capacity is based on maximum boom angle.

THIS CHART IS ONLY A GUIDE AND SHOULD NOT BE USED TO OPERATE THE CRANE.

The individual crane's load chart, operating instructions and other instructional plates must be read and understood prior to operating the crane.

Working range
Main boom

31 m main boom

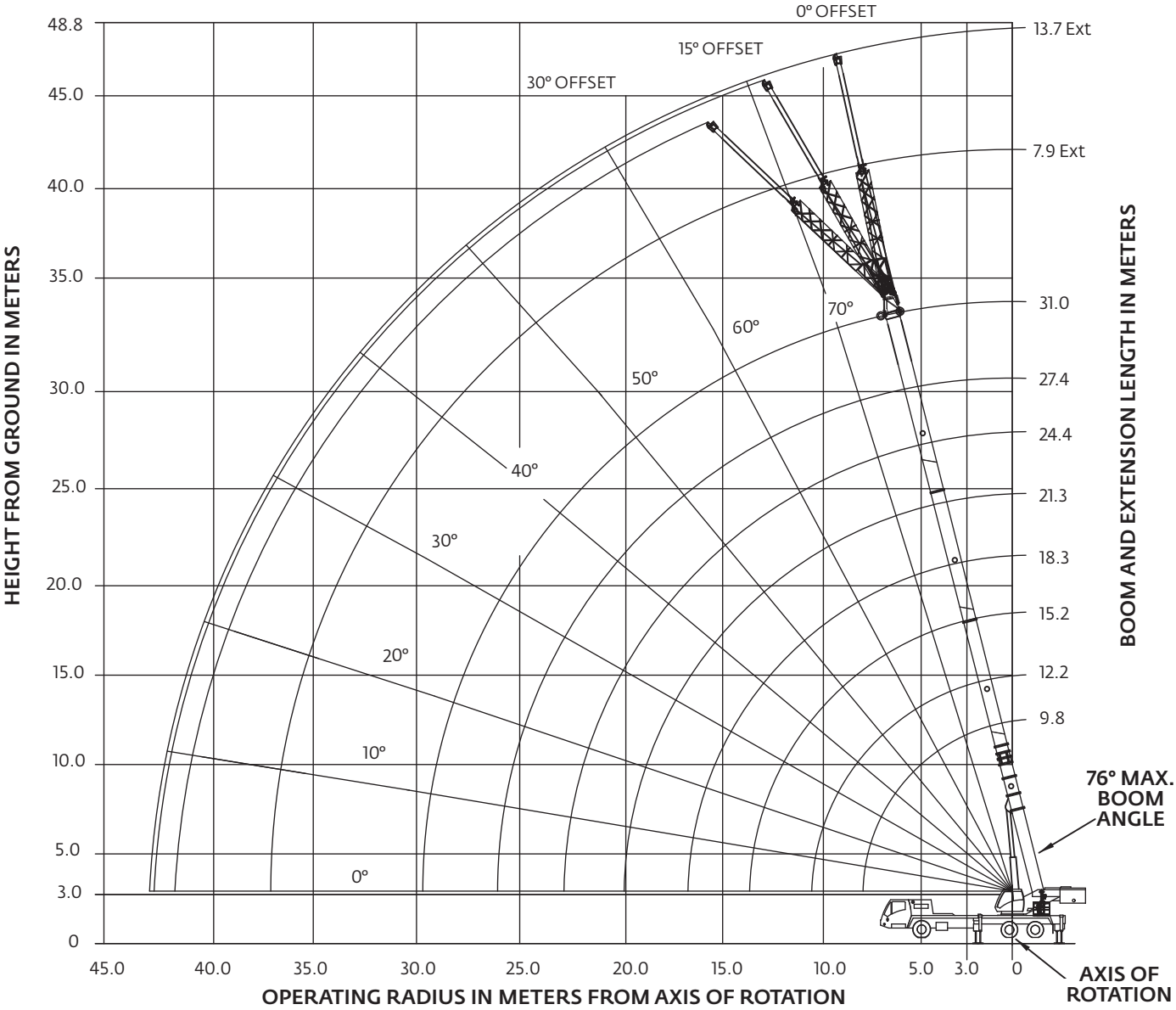

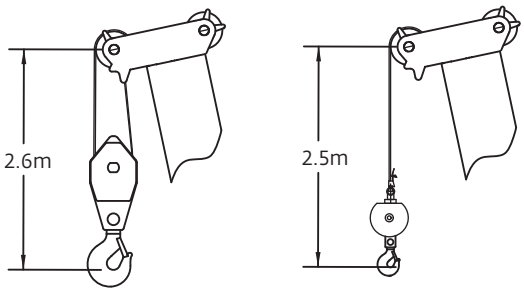

DIMENSIONS ARE FOR THE LARGEST GROVE FURNISHED HOOK BLOCK AND OVERHAUL BALL, WITH ANTI-TWO BLOCK ACTIVATED.

THIS CHART IS ONLY A GUIDE AND SHOULD NOT BE USED TO OPERATE THE CRANE.
The individual crane's load chart, operating instructions and other instructional plates must be read and understood prior to operating the crane.

9,8 m – 31 m | 3900 kg | 100% | 360°

Meters

Radius in meters	Main boom length in meters							
	9,8	12,2	15,2	18,3	21,3	24,4	27,4	31
2,2	40 000 (71)							
3	32 725 (65,5)	22 975 (71)	21 975 (75,5)					
3,5	29 875 (62)	22 975 (68,5)	21 975 (73,5)					
4	27 350 (58,5)	22 975 (65,5)	21 975 (71,5)	21 025 (75)				
4,5	24 175 (55)	22 975 (63)	21 975 (69,5)	20 150 (73,5)				
5	21 425 (51)	21 675 (60)	21 025 (67)	18 925 (71,5)	17 550 (75)			
6	17 200 (42,5)	17 450 (54)	17 650 (63)	16 250 (68)	14 275 (72)	13 450 (74,5)		
7	14 100 (31)	14 350 (47,5)	14 575 (58,5)	14 400 (64,5)	12 650 (69)	12 075 (72)	9975 (74,5)	
8		12 075 (40,5)	12 275 (53,5)	12 375 (61)	11 250 (66)	10 725 (69,5)	9530 (72,5)	8375 (74,5)
9		10 300 (31,5)	10 500 (48,5)	10 625 (57)	10 025 (63)	9585 (67)	8470 (70)	7980 (72,5)
10		8905 (17,5)	9115 (43)	9220 (53)	9045 (60)	8625 (64,5)	7625 (67,5)	7350 (71)
12			6825 (28,5)	6875 (44,5)	6945 (53)	7015 (59)	6245 (63)	6100 (67)
14				5170 (33,5)	5250 (45,5)	5310 (53)	5220 (58,5)	5140 (63)
16				3970 (16)	4070 (37)	4135 (47)	4135 (53)	4140 (58,5)
18					3190 (25)	3270 (39,5)	3275 (47,5)	3275 (54)
20						2590 (30,5)	2615 (41)	2615 (49)
22						2055 (15,5)	2080 (33,5)	2100 (43,5)
24							1645 (23,5)	1670 (37,5)
26								1310 (30)
28								1010 (19,5)
Min. boom angle for indicated length (no load)							0°	
Max. boom length at 0° boom angle (no load)							31 m	

NOTE: ( ) Boom angles are in degrees.

Boom angle	Main boom length in meters							
	9,8	12,2	15,2	18,3	21,3	24,4	27,4	31
0°	11 925 (7,9)	8540 (10,3)	5590 (13,3)	3785 (16,4)	2690 (19,4)	1945 (22,5)	1370 (25,5)	865 (29,1)

NOTE: ( ) Reference radii in meters.

THIS CHART IS ONLY A GUIDE AND SHOULD NOT BE USED TO OPERATE THE CRANE.
The individual crane's load chart, operating instructions and other instructional plates must be read and understood prior to operating the crane.

Load chart

Main boom and extension

31 m | 7,9 m – 13,7 m | 3900 kg | 100% | 360°

Meters

Radius in meters	7,9 m length			13,7 m length		
	0° offset	15° offset	30° offset	0° offset	15° offset	30° offset
12	4335 (73,5)	3525 (75,5)				
14	3925 (70,5)	3300 (72)	2735 (75)	2360 (74,5)		
16	3550 (67)	2930 (69)	2565 (71,5)	2200 (71,5)	1630 (74,5)	
18	3105 (63,5)	2485 (65,5)	2420 (68)	1975 (69)	1565 (71,5)	1360 (76)
20	2625 (60)	2120 (62)	2150 (64,5)	1800 (66)	1500 (68,5)	1305 (73)
22	2100 (56,5)	1820 (58,5)	1845 (60,5)	1690 (63)	1440 (65,5)	1250 (70)
24	1675 (52,5)	1560 (54,5)	1580 (57)	1610 (60)	1375 (62,5)	1200 (66,5)
26	1325 (48,5)	1335 (50,5)	1355 (52,5)	1515 (56,5)	1305 (59,5)	1155 (63,5)
28	1030 (44)	1115 (46)	1155 (48,5)	1320 (53,5)	1240 (56)	1115 (60)
30	780 (39)	840 (41)	900 (43,5)	1085 (49,5)	1180 (52,5)	1085 (56)
32	565 (33,5)	600 (35,5)	650 (37,5)	865 (45,5)	995 (48,5)	1045 (52)
34				670 (41,5)	780 (44,5)	870 (47,5)
36				500 (37)	585 (40)	660 (42,5)
Min. boom angle for indicated length (no load)	29°	31°	36°	34°	35°	35°
Max. boom at 0° boom angle (no load)	24,4 m			24,4 m		

NOTE: ( ) Boom angles are in degrees.

THIS CHART IS ONLY A GUIDE AND SHOULD NOT BE USED TO OPERATE THE CRANE.
The individual crane's load chart, operating instructions and other instructional plates must be read and understood prior to operating the crane.

Superstructure

Boom
8,8 m – 29 m (29 ft – 95 ft) four-section, synchronized full-power boom with a maximum tip height of 31,2 m (102.2 ft)
9,8 m – 31 m (32 ft – 102 ft) four-section, synchronized full-power boom with a maximum tip height of 33,1 m (108.7 ft)

Boom nose
Four nylatron sheaves mounted with removable pin-type rope guards. Quick reeve boom nose.

Boom elevation
Single lift cylinder with integrated valve provides boom angle from -3° to +76°.

Optional offsettable lattice extensions*
7,9 m – 13,7 m (26 ft – 45 ft) offsettable telescopic lattice swingaway extension. Offsets at 0°, 15° and 30°. Stows alongside base boom section.
Maximum tip height: 39,1 m (128.2 ft) with 29 m (95 ft) boom
Maximum tip height: 42,0 m (134.8 ft) with 31 m (102 ft) boom

Rated Capacity Limiter and anti-two block system
Load moment and anti-two block system with audio/visual warning and control lever lockout provides electronic display of boom angle, length, radius, tip height, relative load moment, maximum permissible load, load indication, slew angle and warning of impending two-block condition.

Crane Control System (CCS)
Full electronic control of all crane movements using electrical control allows user customization of levels and response. Integrated with the RCL and engine management system by CANbus. Full-color high-resolution graphic display.

Cab
Full-vision, all-steel fabricated with acoustical lining and tinted safety glass throughout. Adjustable deluxe seat incorporates armrest-mounted electronic single- or dual-axis controllers and a jog dial for easier data input. Other standard features include hot water heater, cab circulating air fan, sliding side and rear windows, sliding skylight with electric wiper and sunscreen, electric windshield wash/wipe, fire extinguisher, seat belt, air conditioning, and dual cab mounted work light.

Swing
Variable speed, planetary swing drive with foot applied multidisc wet brake. Spring applied, hydraulically released swing brake. Single position mechanical house lock, operated from cab.
Maximum speed: 2 rpm

Counterweight
2268 kg (5000 lb) pinned to the superstructure.
*Optional "Heavy Lift" counterweight package consisting of (2) 794-kg (1750-lb) inserts in addition to the standard, for a total of 3856 kg (8500 lb).

Hydraulic system
Two main pumps, one (1) piston and one (1) gear with a combined capacity of 372,1 L/min. (98.3 gpm).
Maximum operating pressure: 275,7 bar (4000 psi).
Four-section pressure-compensated valve bank. Return line-type filter with full-flow bypass protection and service indicator. Replaceable cartridge with a 5-micron filtration rating. 397 L (107 gal) hydraulic reservoir. System pressure test ports.

Hoist
Main and optional auxiliary hoists are powered by axial piston motors with planetary gears and brakes. "Thumb-thumper" hoist drum rotation indicator alerts operator of hoist movement. Standard minimum wrap indication with lock-out.
Hoist line pull:
- 1st layer: 5500 kg (12,200 lb)
- 3rd layer: 4600 kg (10,100 lb)
- 4th layer: 4218 kg (9,300 lb)

Maximum line speed: 131m/min (429 fpm)
Maximum permissible line pull: 5552 kg (12,240 lb) 35 x 7 Class
Rope diameter: 16 mm (5/8 in)
Rope length (main, aux hoists): 138 m (453 ft)
Maximum rope storage: 169 m (555 ft)

Cameras*
Back-up, right-side and hoist cameras.

Carrier

Chassis
Torsionally rigid frame, four-axle carrier fabricated from high-strength, low-alloy steel with towing and tie-down lugs.

Outrigger system
Four hydraulic telescoping, single-stage, double-box-beam outriggers and integral holding valves.
Quick-release type outrigger floats 500 mm (20 in) diameter.
Three-position setting with fully extended, 50%, and fully retracted capacities. Fifth (5th) front jack with sliding self-storing pad and automatic first-retract.
Outrigger Monitoring System standard (required for North America and Canada).
Maximum outrigger pad load: 36 300 kg (80,000 lb)

Outrigger controls
Located in the superstructure cab and on either side of carrier. Crane level indicators located at all stations. Auto leveling and outrigger monitoring system is standard.

**Denotes optional equipment*

Specifications

Engine

Cummins ISL9 six-cylinder, turbocharged and after-cooled diesel engine. 9 L 261 kW (350 bhp) at 2000 rpm. Maximum torque 1159 Nm (1150 lb-ft) at 1400 rpm. "On Highway" EPA, CARB compliant.

Equipped with engine compression brake, ether start aid and 110 V block heater.

Fuel requirement: Maximum of 15 ppm sulfur content (Ultra Low Sulfur Diesel). Diesel exhaust fluid required.

Fuel tank capacity

244 L (64.5 gal)

Transmission

Eaton Fuller Ultrashift® PLUS Transmission: 11 speeds forward, 3 reverse, automated.

Steering

Front-axle, single-circuit, mechanical steering with hydraulic power assist. Turning radius: 10,8 m (35.6 ft).

Axles

Front: (1) tube-type steering axle, 2,34 m (92.29 in) track.

Rear: (2) single reduction drive axles, 1,85 m (73.0 in) track. Inter-axle differential locks.

Drive: 6 x 4 x 2 in

Brakes

S-cam, dual air split system operating on all wheels. Spring-applied, air-released parking brake acting on rear axles. Air dryer. ABS with traction control.

Suspension

Front: Multi-leaf spring.

Rear: Walking beam with air bags and shock absorbers.

Tires

Front: 425/65R22.5 tubeless, mounted on aluminum disc wheels.

Rear: 11R22.5 tubeless, mounted on aluminum disc wheels.

Lights

Lighting package including turn indicators; head, tail, brake and hazard warning lights.

Cab

Single-driver design, aluminum fabricated with acoustical lining and tinted safety glass. Air conditioning. Fabric-covered seat with air adjustment. Driving controls and engine instrumentation including tilt telescope multifunction steering wheel, tachometer, speedometer, trip meter, voltmeter, water temp., oil, fuel level, air pressure gauge, engine high temp./low oil pressure A/V warning. Other standard items include display for back-up and passenger side cameras, hot water heater/defroster, electric windshield wash/wipe, fire extinguisher, wireless rigging remote with battery charging station, seat belt and door lock.

Electrical system

Two (2) maintenance-free batteries provide 24 V electrical system. Standard lockable battery disconnect.

Maximum speed

105 kph (65 mph)

Gradeability (theoretical)

79.7%, 1st gear

Miscellaneous standard equipment

Aluminum fenders; dual rear view mirrors; electronic back-up alarm; two sling/tool boxes; tire inflation kit; air cleaner restriction indicator; headache ball and hook block stowage trays; air conditioning; air horn; hoist access platform

Optional equipment*

- 360° mechanical swing lock
- Aluminum outrigger pads
- Auxiliary hoist package includes Model HP15C-17G auxiliary hoist with electronic hoist drum rotation indicator, hoist drum cable follower, hoist mirror, 137 m (450 ft) of 16 mm (5/8 in) 35 x 7 class wire rope and auxiliary single-sheave boom nose.
- Auxiliary lighting package includes carrier cab and superstructure-mounted amber flashing beacons, dual base boom-mounted floodlights, in-cab RCL light bar.
- Bluetooth/AM/FM radios
- Counterweight package
- CraneSTAR asset management system
- Cross axle differential locks
- Hook blocks
- Pintle hook (rear)
- Single-axis joysticks
- Vertical RCL light tower
- Wind speed indicator
- Winterfront radiator cover
- Wireless rigging remote control
- 610 mm (24 x 24 x 24) in toolbox

*Denotes optional equipment

Symbols glossary

Axles

Boom

Boom elevation

Boom extension

Boom length

Boom nose

Brakes

Cab

Camera

Crane control system

Counterweight

Drive

Electrical system

Engine

Extension

Fuel tank capacity

Gear

Grade

Heavy duty jib

Hoist

Hook block

Hydraulic system

Insert

Lights

Oil

Outrigger controls

Outriggers

Radius

Rotation

Speed

Steering

Suspension

Swing

Tires

Transmission

Notes

Notes

Manitowoc Cranes

Regional headquarters

Americas
Manitowoc, Wisconsin, USA
Tel: +1 920 684 4410

Shady Grove, Pennsylvania, USA
Tel: +1 717 597 8121

Europe, Middle East, Africa
Dardilly, France - TOWERS
Tel: +33 (0)4 72 18 20 20

Wilhelmshaven, Germany - MOBILE
Tel: +49 (0) 4421 294 0

China
Shanghai, China
Tel: +86 21 6457 0066

Middle East and Greater Asia-Pacific
Singapore
Tel: +65 6264 1188

Dubai, UAE
Tel: +971 4 8862677

Manitowoc Crane Care™

Manitowoc Finance™

This document is non-contractual. Constant improvement and engineering progress make it necessary that we reserve the right to make specification, equipment, and price changes without notice. Illustrations shown may include optional equipment and accessories and may not include all standard equipment.

©2019 The Manitowoc Company, Inc.

Form No. TMS500-2 PG
Part No. 19-005/1M/0719

www.manitowoc.com